KANOPY

DSTCSZ4

100% SCALE

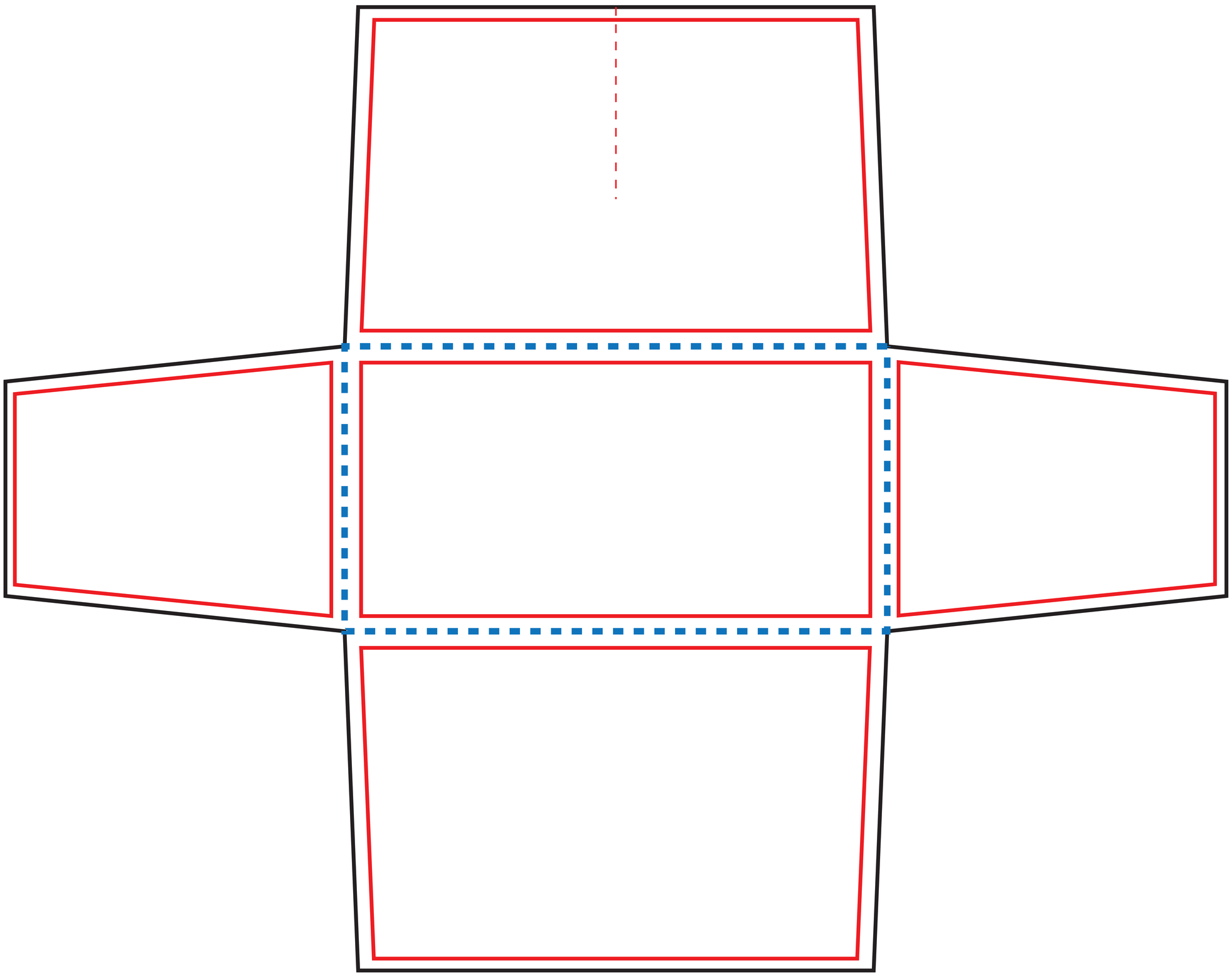

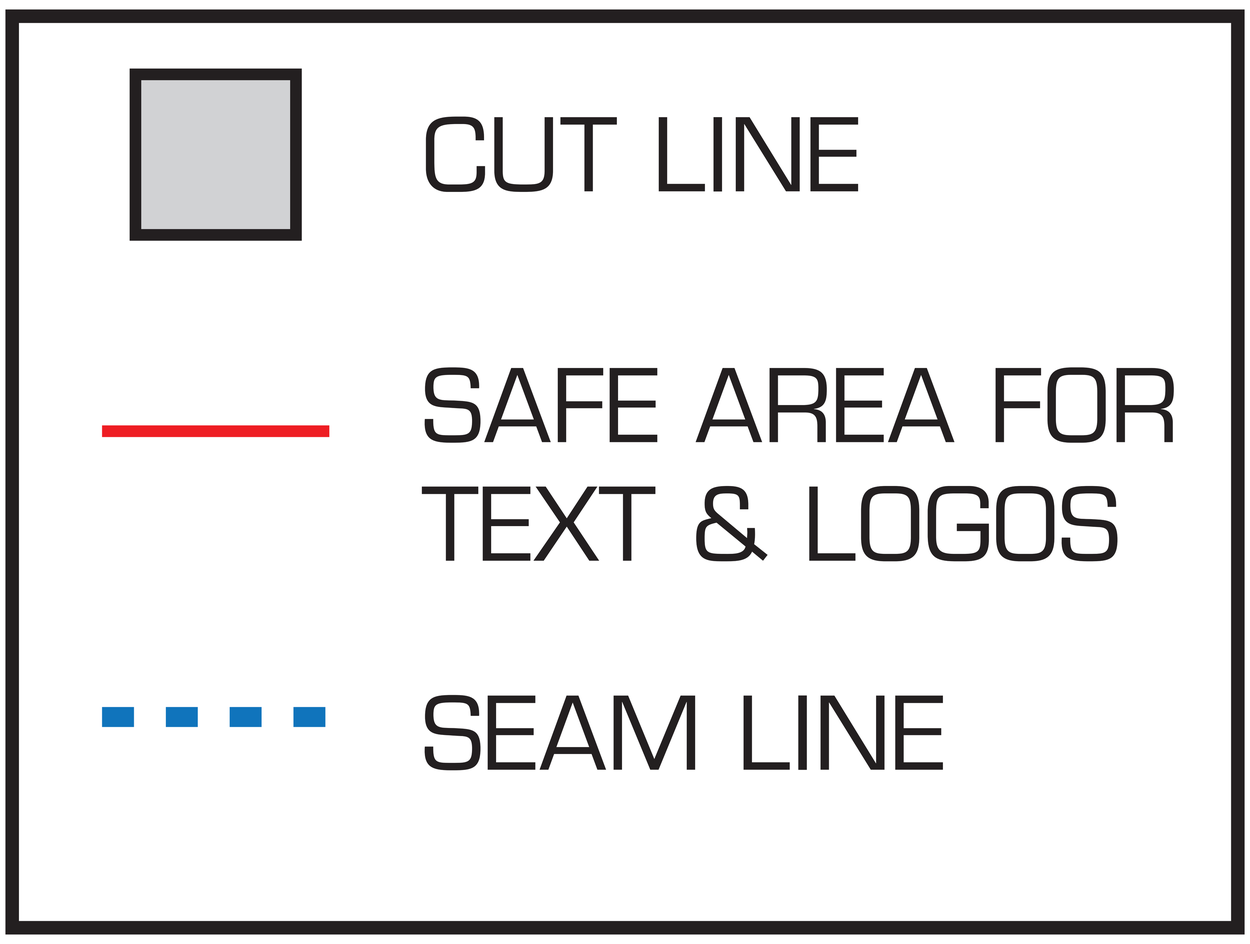

GRAPHIC REQUIREMENTS

We only accept files created with the following software:

- Adobe Illustrator
- Adobe Photoshop

File prep and submission color matching (screen printing only)
File resolution & scale (digital printing only)

Please submit your files via:
Under 20MB: Email
20MB up to 2GB: https://kdkanopycom.wetransfer.com/
Over 2GB: CD/DVD or use personal FTP

When submitting artwork:

Digital

- All artwork needs to be supplied in one of these formats: Tif, Psd, Eps, or Ai.
- All fonts and strokes need to be converted to outlines.
- All artwork needs to be supplied in CMYK, we cannot print RGB.
- Do not flatten layers and please remove all hidden layers.
- Final artwork must have all images embedded, no linked files. Please provide originals in a separate file.
- Only provide the artwork that is to be printed, please crop all images to the provided templates

Screen

- All artwork needs to be supplied in either Eps or Ai format.
- All fonts, stokes, and stroke effects need to be converted to outlines.
- All artwork needs to be supplied in pantones or cmyk build, we cannot print RGB.
- Remove all effects from the artwork, such as Gaussian Blurs, Drop Shadows, or Gradient Mesh
- If the logo is detailed, please provide all ink colors. Do not substitute fabric punch out as a replacement color for the artwork.
- Only provide the artwork that is to be printed
- Recommended minimum stroke size to prevent detail loss should be .0625”

Warning:

We do not recommend combining screen and digital printing as each process yields different results with the same colors.

COLOR MATCHING (SCREEN PRINTING ONLY)

In order to achieve color accuracy in your final prints, please include the following:

- Specify all pantone numbers in your file if applicable
- All artwork needs to be supplied in pantones or cmyk build, we cannot print RGB
- A white plate is recommended for any printing, with the exception of black ink, on any colored fabric other than white.
- Spot colors are preferred over 4 color process. Using a spot color allows us to get a closer target match to the pantone number.

With a four color process, we have a minimal control over the breakdown and final output

FILE RESOLUTION & SCALE (DIGITAL PRINTING ONLY)

- For optimum quality your artwork should be a minimum 100dpi at full size and 200dpi at 50% scale.
- Please leave 3” from each edge to avoid having the graphic covered by the edging once sewn